SHOW GEAR

USER MANUAL

ENGLISH

V1.0

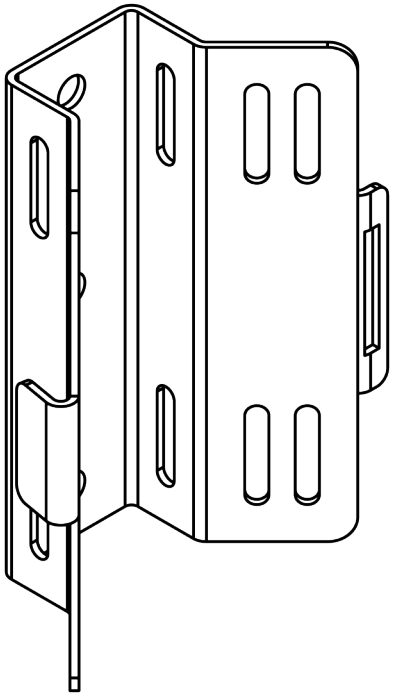

Mast Bracket

Product code: E748004

Preface

Thank you for purchasing this Showgear product.

The purpose of this user manual is to provide instructions for the correct and safe use of this product.

Keep the user manual for future reference as it is an integral part of the product. The user manual shall be stored at an easily accessible location.

This user manual contains information concerning:

- Safety instructions
- Intended and non-intended use of the device
- Installation and operation of the device
- Maintenance procedures
- Troubleshooting
- Transport, storage and disposal of the device

Non-observance of the instructions in this user manual may result in serious injuries and damage of property.

©2024 Showgear. All rights reserved.

No part of this document may be copied, published or otherwise reproduced without the prior written consent of Highlite International.

Design and product specifications are subject to change without prior notice.

For the latest version of this document or other language versions, please visit our website www.highlite.com or contact us at service@highlite.com.

Highlite International and its authorized service providers are not liable for any injury, damage, direct or indirect loss, consequential or economic loss or any other loss arising from the use of, or inability to use or reliance on the information contained in this document.

Highlite International B.V. – Vestastraat 2 – 6468 EX Kerkrade – the Netherlands

Table of contents

1. Introduction **3**
1.1. Before Using the Product 3
1.2. Intended Use 3
1.3. Text Conventions 3
1.4. Symbols and Signal Words 4

2. Safety **5**
2.1. Warnings and Safety Instructions 5
2.2. Requirements for the User 6
2.3. Personal Protective Equipment 6

3. Description of the Device **7**
3.1. Overview 7
3.2. Product Specifications 8
3.3. Dimensions 8

4. Installation **9**
4.1. Safety Instructions for Installation 9
4.2. Personal Protective Equipment 9
4.3. Working Load Limit 9
4.4. Mounting of an External Device 10
4.5. Mounting of the Device 11
4.6. Connecting Multiple Devices 12

5. Inspection and Maintenance **13**
5.1. Inspection 13
5.2. Corrective Maintenance 13
5.3. Basic Cleaning Instructions 13

6. Deinstallation **14**
6.1. Safety Instructions for Deinstallation 14
6.2. Instructions for Deinstallation 14

7. Transportation and Storage **14**
7.1. Instructions for Transportation 14
7.2. Storage 14

8. Disposal **14**

1. Introduction

1.1. Before Using the Product



Important
Read and follow the instructions in this user manual before installing, operating or servicing this product.

The manufacturer will not accept liability for any resulting damages caused by the non-observance of this manual.

After unpacking, check the contents of the box. If any parts are missing or damaged, contact your Highlite International dealer.

Your shipment includes:

- Showgear Mast Bracket
- 2 x endless ratchet straps (2 m)
- User manual

Figure 1

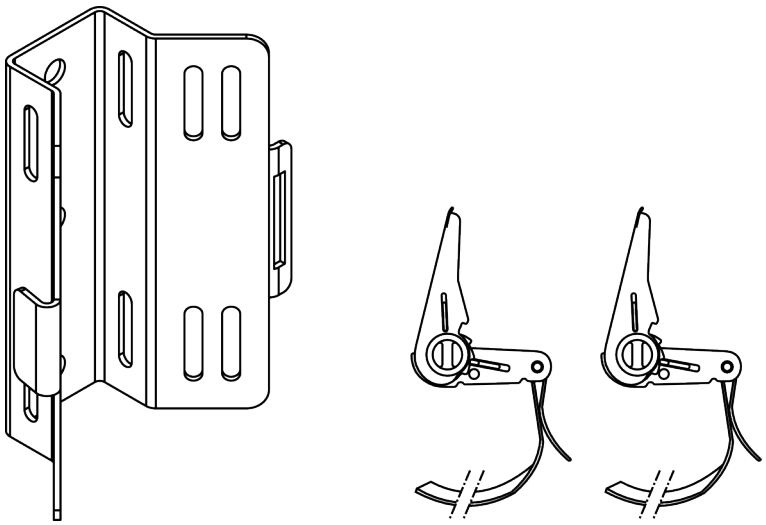

1.2. Intended Use

This device is intended for professional use as a connection element in the entertainment industry. It can be installed on upright structures, such as masts, columns, pillars or poles (rounded and angular), as well as on trees.

Any other use, not mentioned under intended use, is regarded as non-intended and incorrect use.

1.3. Text Conventions

Throughout the user manual the following text conventions are used:

- References: References to parts of the device are in bold lettering, for example: "turn the **adjustment handle (05)**". References to chapters are hyperlinked
- 0–255: Defines a range of values
- Notes: **Note:** (in bold lettering) is followed by useful information or tips

1.4. Symbols and Signal Words

Safety notes and warnings are indicated throughout the user manual by safety signs.

Always follow the instructions provided in this user manual.

 **DANGER**	Indicates an imminently hazardous situation which, if not avoided, will result in death or serious injury.
 **WARNING**	Indicates a potentially hazardous situation which, if not avoided, could result in death or serious injury.
 **CAUTION**	Indicates a potentially hazardous situation, which, if not avoided, may result in minor or moderate injury.
 **Attention**	Indicates important information for the correct operation and use of the product.
 **Important**	Read and observe the instructions in this document.

2. Safety



Important
Read and follow the instructions in this user manual before installing, operating or servicing this product.

The manufacturer will not accept liability for any resulting damages caused by the non-observance of this manual.

2.1. Warnings and Safety Instructions



WARNING
Incorrect installation can cause serious injuries and damage of property.

This product may be installed only by instructed or skilled persons.

- Do not exceed the working load limit (WLL) as indicated on the device and in this user manual.
- When the device is used together with other accessories, make sure that the working load limit (WLL) of each component is not exceeded.



WARNING
Do not use the device if it is damaged.

Do not use the device if the device or parts thereof show signs of damage and wear. Before and after every use, examine the device visually for any defects. If any fault is found, mark the device clearly and remove it from service.

- Examine the device for damage, cracks, and corrosion.
- Examine the welds for signs of corrosion, and cracks.



Attention
Correct use of the endless ratchet straps

- Do not use the endless ratchet straps for lifting, suspending or towing.
- Do not use the endless ratchet straps if knotted.
- Never join a cut endless ratchet strap by knotting.
- Never knot endless ratchet straps together.
- Only use endless ratchet straps with a legible label.



Attention
For professional use only
This device must be used only for the purposes it is designed for.

This device is intended for professional use as a connection element in the entertainment industry. Any incorrect use may lead to hazardous situations and result in injuries and material damage.

- Do not use the device on upright structures different from those indicated in this user manual.
- Do not modify the device. Unauthorized modifications to the device will render the warranty void. Such modifications may result in injuries and material damage.
- Use the device only in environments with an ambient temperature between -20 and 60 °C.

2.2. Requirements for the User



DANGER
This product may not be used by ordinary persons.

This product may be used by instructed or skilled persons. Installation and maintenance may be carried out by instructed or skilled persons. Service shall be carried out only by skilled persons. Contact your Highlite International dealer for more information.

Instructed persons have been instructed and trained by a skilled person, or are supervised by a skilled person, for specific tasks and work activities associated with the installation, service and maintenance of this product, so that they can identify risks and take precautions to avoid them.

Skilled persons have training or experience, which enables them to recognize risks and avoid hazards associated with the installation, service and maintenance of this product.

Ordinary persons are all persons other than instructed persons and skilled persons. Ordinary persons include not only users of the product but also any other persons that may have access to the device or who may be in the vicinity of the device.

2.3. Personal Protective Equipment

During installation, deinstallation and rigging wear personal protective equipment in compliance with the national and site-specific regulations.

3. Description of the Device

The Showgear Mast Bracket allows you to easily mount lighting fixtures against a mast or tree. Hooks on the side of the bracket make it possible to attach brackets to each other.

3.1. Overview

Figure 2

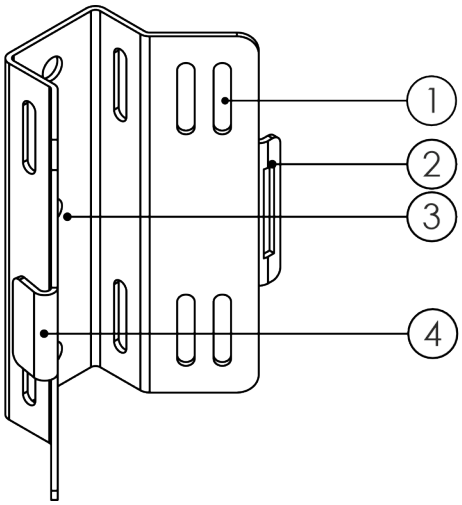

01) 12 x strap slots
02) Connection slot
03) 3 x mounting openings
04) Connection hook

Figure 3

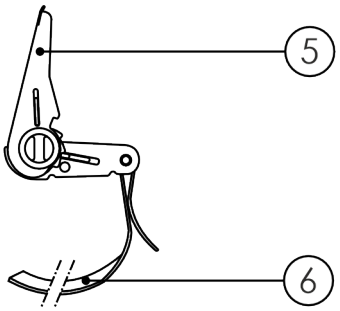

05) Ratchet
06) Strap

Note:

It is possible to use other endless ratchet straps than the supplied ones. Make sure that you use endless ratchet straps:

- That have LC (lashing capacity) equal or higher to the LC of the supplied endless ratchet straps.
- That are made of the same material as the supplied endless ratchet straps.

3.2. Product Specifications

Model:	Mast Bracket

Mechanical Specifications:	
WLL	50 kg
Material	Steel
Finish	Powder coating
Color	Black
Length	73 mm
Height	200 mm
Width	153 mm
Weight	0,91 kg

Lashing:	
Type:	Endless ratchet strap
Lashing capacity (LC)	800 daN
Standard hand force (SHF)	50 daN
Standard tension force (STF)	80 daN
Webbing material	Polyester (PES)
Strap length	2 m
Maximum elongation	7 %

Included Items:	
Included accessories	2 x Endless ratchet straps

Thermal:	
Ambient temperature t_a	From -20 °C to 60 °C

3.3. Dimensions

Figure 4

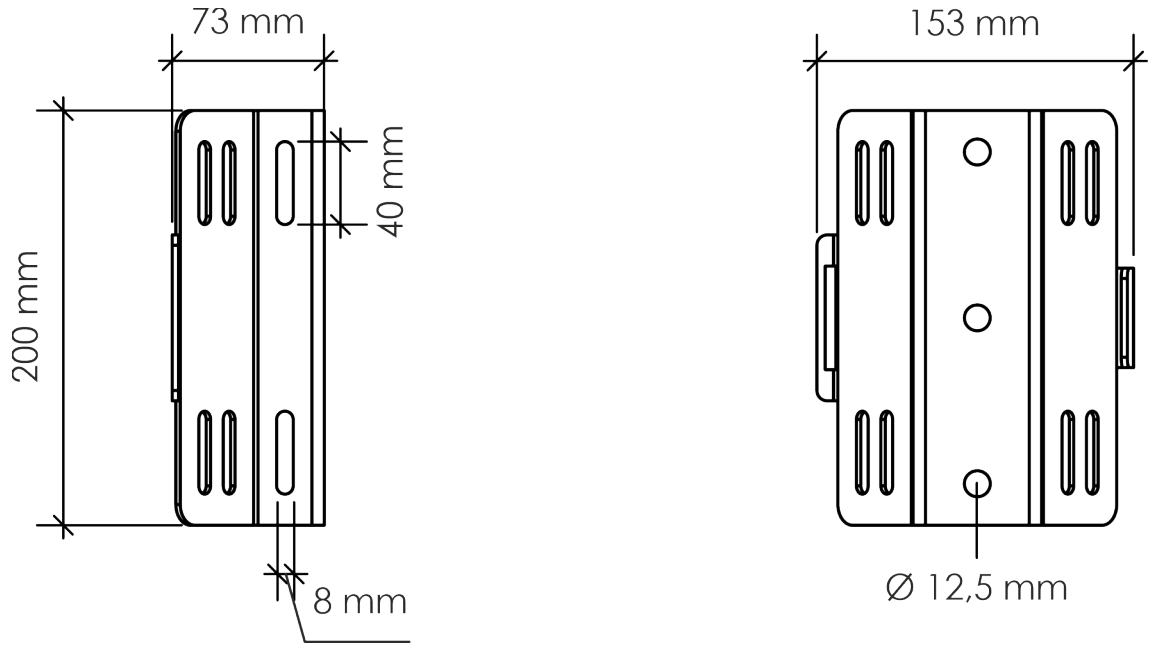

4. Installation

4.1. Safety Instructions for Installation



WARNING
Incorrect installation can cause serious injuries and damage of property.

Installation must be carried out only by instructed or skilled persons.

Minimum 2 persons are necessary to install the device.

4.2. Personal Protective Equipment

During installation, deinstallation and rigging wear personal protective equipment in compliance with the national and site-specific regulations.

4.3. Working Load Limit



WARNING
Do not exceed the working load limit of the device.

The maximum working load of the device is ≤ 50 kg.

- Do not mount external devices to the Mast Bracket that exceed the working load limit of the Mast Bracket.
- Make sure that the tree or the upright structure can hold the combined weight of all mounted devices and accessories.
- Consider any dynamic forces in the calculations, if applicable.

4.4. Mounting of an External Device

WARNING
Do not exceed the working load limit of the device.

The maximum working load of the device is ≤ 50 kg.

- Do not mount external devices to the Mast Bracket that exceed the working load limit of the Mast Bracket.
- Make sure that the tree or the upright structure can hold the combined weight of all mounted devices and accessories.
- Consider any dynamic forces in the calculations, if applicable.

An external device, e.g. a luminaire, can be mounted onto the device with a hex bolt (M12) and a hex nut. The device has 3 mounting openings (Ø 12,5 mm).

To mount an external device, follow the steps below:

01) Insert the hex bolt through the middle **mounting opening (03)** and the mounting opening on the bracket of the external device.
02) Fit the hex nut on the hex bolt and tighten the hex nut. We recommend that you use plain washers.
03) Secure the external device with a secondary suspension, for example a safety cable. Make sure that the secondary suspension can hold 10 times the weight of the external device.

Figure 5

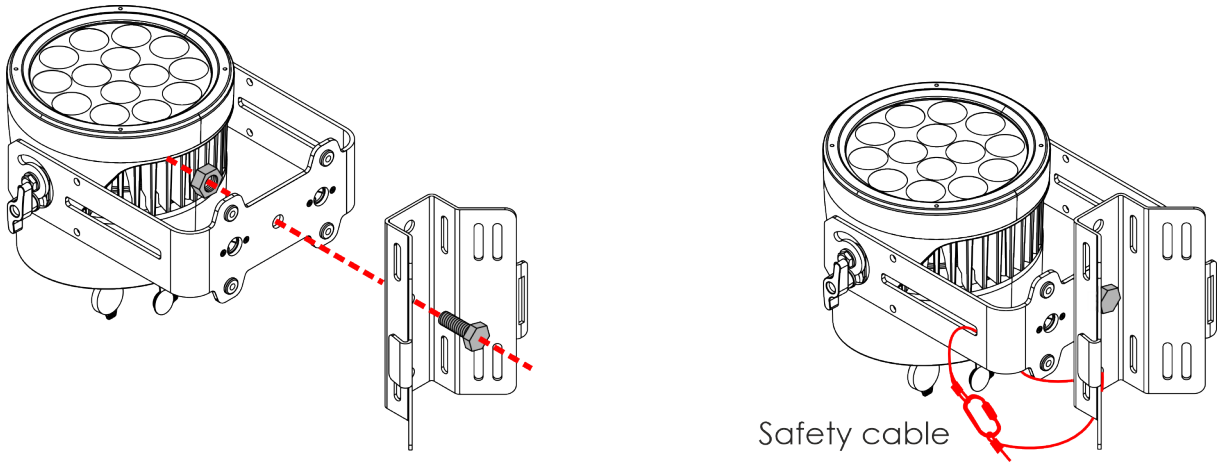

4.5. Mounting of the Device

CAUTION
Restrict the access under the work area during installation.

Minimum 2 persons are necessary to install the device.

- Do not apply higher force to the ratchet than the maximum hand force marked on the label of the endless ratchet strap.
- Do not use mechanical aids such as levers, bars etc. as extensions, unless they are part of the tensioning device.

The device can be installed on trees and upright structures, such as masts, columns, pillars or poles (rounded and angular).

This figure shows an example of the device installed to an upright structure and a luminaire mounted to the device (see 4.4. Mounting of an External Device on page 10).

Figure 6

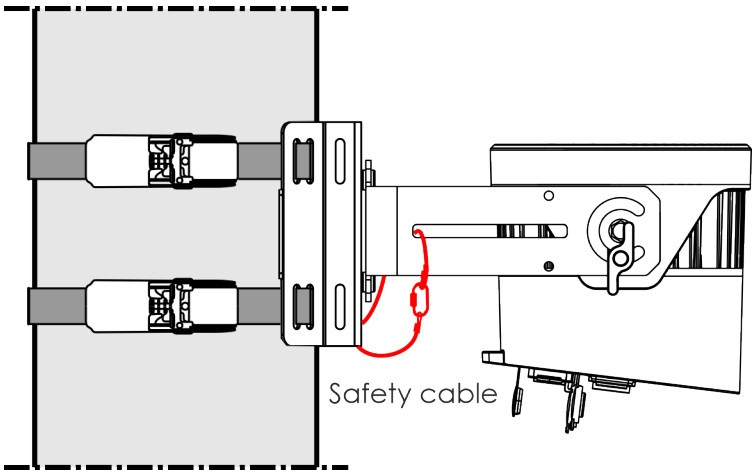

To mount the device follow the steps below:

01) Mount the external device (see 4.4. Mounting of an External Device on page 10).
02) Thread the **straps (06)** of the 2 endless ratchet straps supplied with the device through the **strap slots (01)**. Make sure that the **straps (06)** are not twisted.
03) Put the device against a tree or an upright structure at the height at which you want to mount it.

Figure 7



04) Thread the open ends of the **straps (06)** of the 2 ratchet straps through the **ratchets (05)**.
05) Repeatedly open and close the **ratchets (05)** to tighten the endless ratchet straps around the tree or the upright structure. Make sure that the endless ratchet straps are not tensioned too much.

Figure 8

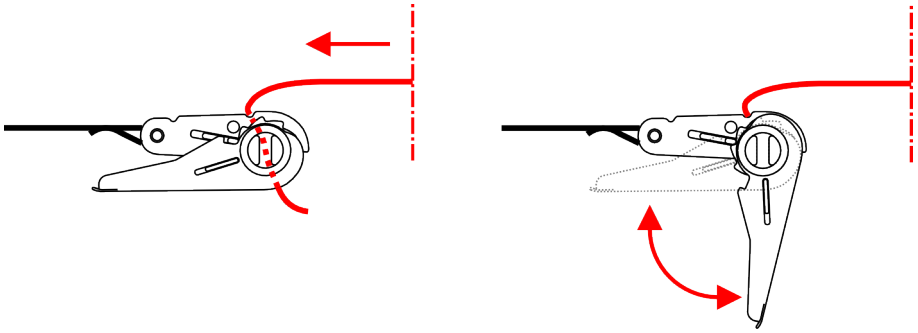

4.6. Connecting Multiple Devices

WARNING
Do not exceed the working load limit of the device.

The maximum working load of the device is ≤ 50 kg.

When connecting multiple devices, the combined maximum working load of all connected devices is ≤ 50 kg. For example: If you connect 2 devices, the combined weight of all external devices connected to the Mast Bracket devices must not exceed 50 kg.

To connect multiple devices to each other, follow the steps below:

01) Align 2 devices next to each other.
02) Insert the **connection hook (04)** of the 1st device into the **connection slot (02)** of the 2nd device.
03) Repeat steps 1–2 to connect more devices next to each other, if necessary.

Figure 9

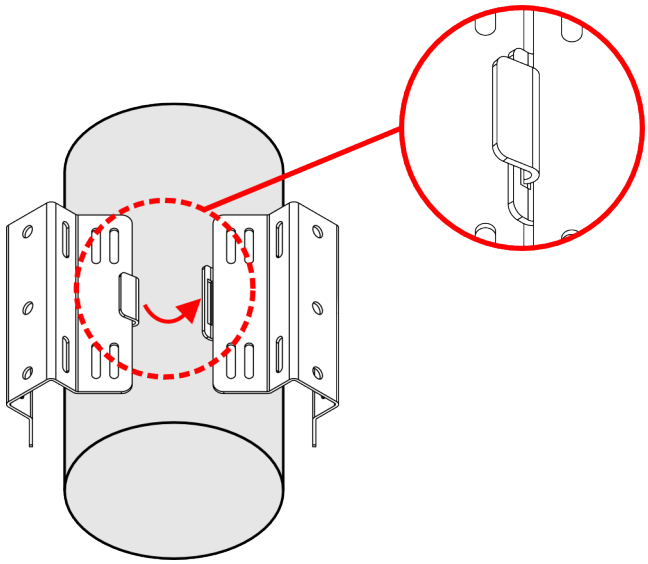

Note:

The Mast Bracket is compatible with other Showgear products and can be connected to them. Contact your Highlite International dealer for more information. This is a list of the compatible Showgear products:

- E748001 Tree & Pole Bracket MKII
- E748002 Tree Bracket
- E748003 Mast & Pole Bracket

5. Inspection and Maintenance



Attention
Inspection and maintenance may be carried out only by instructed or skilled persons. Service shall be carried out only by skilled persons.

5.1. Inspection



Attention
Inspect the device visually for any defects.

Before and after every use, examine the device visually for any defects. During use, inspect the device at regular intervals according to the inspection schedule established for the site.

Examine the device for damage, cracks, and corrosion.

If any fault is found, mark the device clearly and remove it from service.

The device is supplied with endless ratchet straps.

- Examine the endless ratchet straps for signs of wear. Do not use the endless ratchet straps if there are tears, cuts, nicks and breaks in the webbing and the retaining stitches.
- Examine the ratchet for deformations, splits, signs of wear, and signs of corrosion.

5.2. Corrective Maintenance

- Do not modify the device.
- Refer repairs and servicing to skilled persons. Contact your Highlite International dealer for more information.

5.3. Basic Cleaning Instructions

- Use a damp cloth to clean the ratchet.
- Do not use alcohol, solvents or abrasive agents.
- Wash the straps in water and hang them to dry at a well ventilated place.

6. Deinstallation

6.1. Safety Instructions for Deinstallation



WARNING
Incorrect deinstallation can cause serious injuries and damage of property.

Deinstallation must be carried out only by instructed or skilled persons.



CAUTION
Restrict the access under the work area during deinstallation.

6.2. Instructions for Deinstallation

01) Slightly open one of the **ratchets (05)** and pull on the spring-loaded clip to loosen the endless ratchet strap.
02) Take out the **strap (06)** from the **ratchet (05)**.
03) Repeat steps 1–2 to loosen and open the other endless ratchet strap.
04) Remove the device from the tree or the upright structure.
05) Remove the 2 endless ratchet straps from the device.
06) Deinstall the external device.

7. Transportation and Storage

7.1. Instructions for Transportation

Make sure that appropriate measures are taken to prevent damage to the device during transportation.

7.2. Storage

- Inspect the device for defects before storing (see 5.1. Inspection on page 13).
- Clean the device before storing (see 5.3. Basic Cleaning Instructions on page 13).
- Store the device in a dry, ventilated environment to avoid corrosion.

8. Disposal

After the device is removed from service it can be disposed of as scrap.