English

Roland

SPEAKER STAND **ST-A95**

Owner's Manual

Before using this unit, carefully read "USING THE UNIT SAFELY" and "IMPORTANT NOTES." After reading, keep the document(s) where it will be available for immediate reference.

USING THE UNIT SAFELY

INSTRUCTIONS FOR THE PREVENTION OF FIRE, ELECTRIC SHOCK, OR INJURY TO PERSONS

About ⚠WARNING and ⚠CAUTION Notices

⚠WARNING	Used for instructions intended to alert the user to the risk of death or severe injury should the unit be used improperly.
⚠CAUTION	Used for instructions intended to alert the user to the risk of injury or material damage should the unit be used improperly. * Material damage refers to damage or other adverse effects caused with respect to the home and all its furnishings, as well to domestic animals or pets.

About the Symbols

⚠	The ⚠symbol alerts the user to important instructions or warnings.The specific meaning of the symbol is determined by the design contained within the triangle. In the case of the symbol at left, it is used for general cautions, warnings, or alerts to danger.
⃠	The ⃠symbol alerts the user to items that must never be carried out (are forbidden). The specific thing that must not be done is indicated by the design contained within the circle. In the case of the symbol at left, it means that the unit must never be disassembled.
●	The ●symbol alerts the user to things that must be carried out. The specific thing that must be done is indicated by the design contained within the circle. In the case of the symbol at left, it means that the power-cord plug must be unplugged from the outlet.

ALWAYS OBSERVE THE FOLLOWING

⚠ WARNING

Do not open or perform any internal modifications on the product.

Do not attempt to repair the product, or replace parts within it (except when this manual provides specific instructions directing you to do so). Refer all servicing to your retailer, the nearest Roland Service Center, or an authorized Roland distributor, as listed on the "Information."

Never install the product in any of the following locations.

- Subject to temperature extremes (e.g., direct sunlight in an enclosed vehicle, near a heating duct, on top of heatgenerating equipment); or are
- Damp (e.g., baths, washrooms, on wet floors); or are
- Exposed to steam or smoke; or are
- Subject to salt exposure; or are
- Humid; or are
- Exposed to rain; or are
- Dusty or sandy; or are
- Subject to high levels of vibration and shakiness.

Make sure you always have the product placed so it is level and sure to remain stable. Never place it on stands that could wobble, or on inclined surfaces.

In households with small children, an adult should provide supervision until the child is capable of following all the rules essential for the safe operation of the product.

Protect the product from strong impact.
(Do not drop it!)

⚠ CAUTION

This product for use only with specific Roland product. See apparatus instructions. Use with other models is capable of resulting in instability causing possible injury.

Try to prevent cords and cables from becoming entangled. Also, all cords and cables should be placed so they are out of the reach of children.

Never climb on top of, nor place heavy objects on the product.

Keep the included cable tie in a safe place out of children's reach, so there is no chance of them being swallowed accidentally.

IMPORTANT NOTES

Placement

- Do not expose the product to direct sunlight, place it near devices that radiate heat, leave it inside an enclosed vehicle, or otherwise subject it to temperature extremes. Excessive heat can deform or discolor the product.
- Depending on the material and temperature of the surface on which you place the product, its rubber feet may discolor or mar the surface.

Maintenance

- For everyday cleaning wipe the product with a soft, dry cloth or one that has been slightly dampened with water. To remove stubborn dirt, use a cloth impregnated with a mild, non-abrasive detergent. Afterwards, be sure to wipe the product thoroughly with a soft, dry cloth.
- Never use benzine, thinners, alcohol or solvents of any kind, to avoid the possibility of discoloration and/or deformation.

Additional precautions

- Do not insert your fingers inside the stand pipe. This may result in injury.

Names of Things

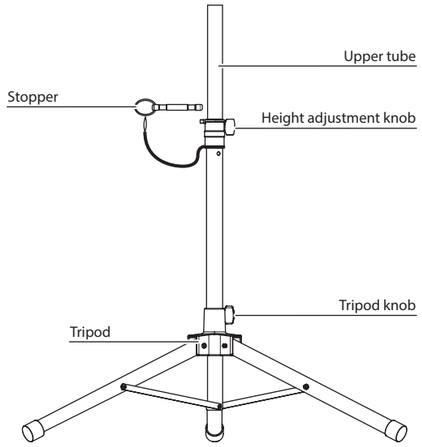

Attachment Procedure

NOTE

- Always have at least one other person assist you when mounting the speaker on a speaker stand, or when adjusting the height of the stand while the speaker remains mounted on it.
- Be careful not to pinch your fingers, when you assemble.

1. Loosen tripod knob and open the tripod.

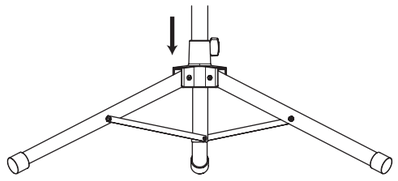

* Slowly open the tripod to its full extent as shown in the above illustration. If the tripod is not opened wide enough, the stand may be unstable.

2. Firmly tighten the tripod knob.

3. Loosen height adjustment knob and make upper tube longer.

4. Set up upper tube at the required height and insert the stopper into the hole in upper tube (refer to following illustration 1).

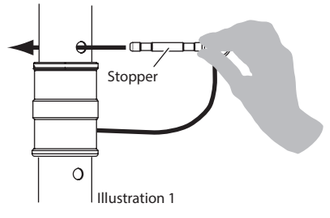

Illustration 1

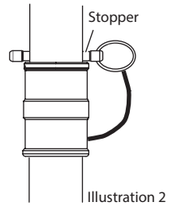

Illustration 2

* Use the ST-A95 only with the stopper inserted into upper tube.

* Use the stopper by passing it through the tube as shown in illustration 2.

5. Firmly tighten the height adjustment knob.

6. Fit the hole on the speaker onto upper tube.

Caution Regarding Placement

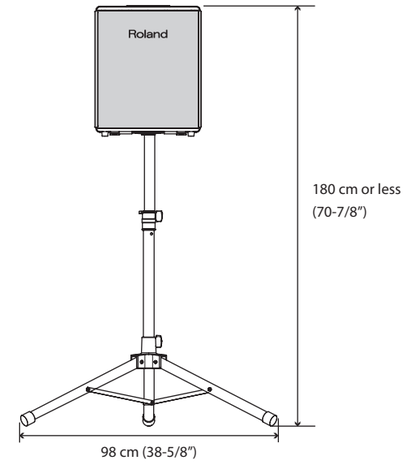

- Using a speaker stand that does not meet the specifications at left or that is adjusted to a height over 180 cm (70-7/8"), or a leg spread of 98 cm (38-5/8") may result in damage to equipment or injury due to the stand tipping over. (The tripod will be 98 cm wide when fully opened.)
- When using a speaker stand, the speaker stand must be carefully placed so it is level and sure to remain stable.
- To prevent accidents due to falls, do not place any object on the speaker when it's mounted on a speaker stand.

Main Specifications

Compatible models

Refer to the Roland website for the latest information on compatible models.

http://www.roland.com/

Weight-bearing capacity

40.0 kg

Weight

2.3 kg

5 lbs 2 oz

Dimensions

135 (W) x 135 (D) x 885 (H) mm

5-3/8 (W) x 5-3/8 (D) x 34-7/8 (H) inches (folded)

Accessories

Owner's manual, Cable tie x 2, Carrying bag

* This document explains the specifications of the product at the time that the document was issued. For the latest information, refer to the Roland website.

© 2009 Roland Corporation